RoHS Compliant

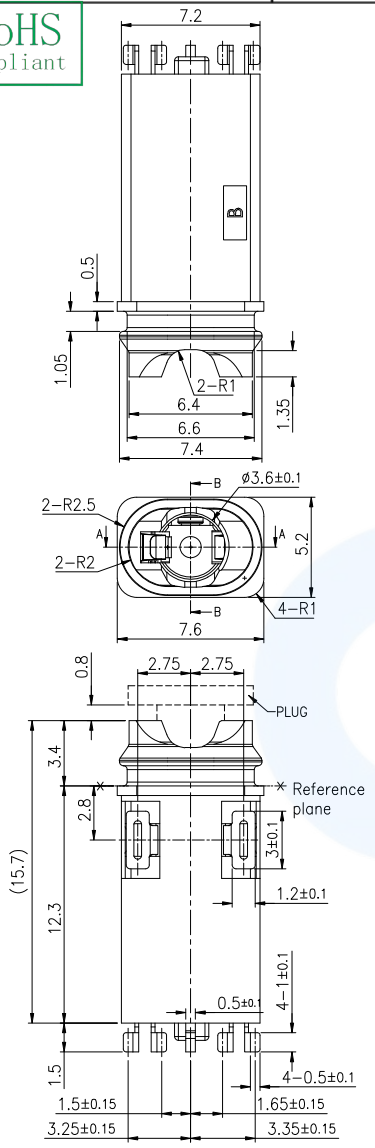

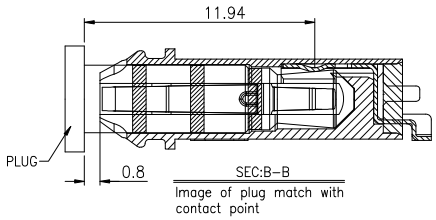

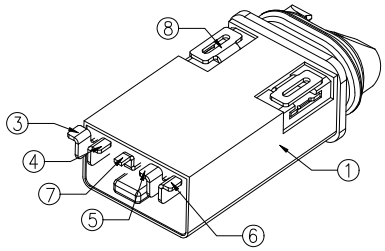

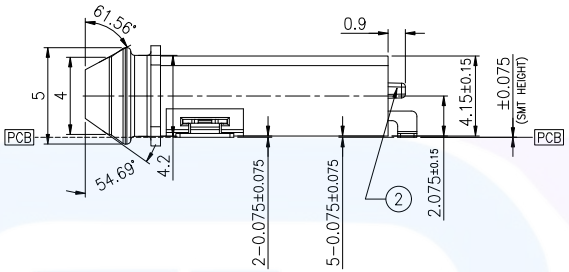

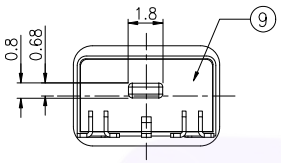

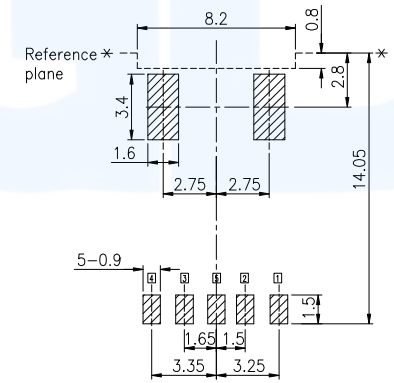

Recommended PCB Layout

Tolerance: ±0.1(Top view)

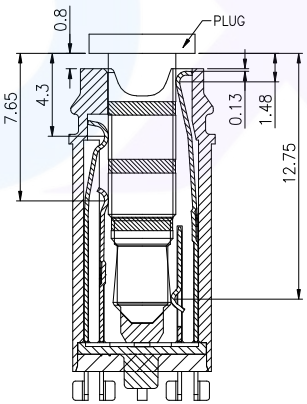

SEC:A-A

Image of plug match with contact point

SPECIFIATIONS:

1. INSULATION RESISTANCE:A VOLTAGE OF 500V D.C. SHALL BE APPLIED TO THE TERMINALS, AFTER WHICH MEASUREMENT SHALL BE MADE. A GAUGE FOR THE MEASUREMENT SHALL BE USED THE INSULATEDGAUGE.
2. CONTACT RESISTANCE:30mΩ OR LESS
3. VOLTAGE PROOF:500V AC FOR ONE MINUTE
4. DURABILITY: 10,000 INSERTION/REMOVAL CYCLES(MINIMUM)
5. INSETION FORCE:0.4KGF~2.0KGF
6. WITHDRAWAL FORCE:0.4KGF~2.0KGF
7. WATER PROOFNESS: THIS PRODUCT IS CONFORM TO JIS STANDARD IPX7 BY WATERPROOF JACK
8. USING PLUG: Φ3.5MM、4-POLE STEREO EARPHONE(LCH/RCH/GND/MIC) PROVIDED THAT THEY CONFORM TO JIS C6560
9. OVAL RING
   9-1.Hardness of silicone rubber: 70°
   9-2.Horizontal flash 0.10mm max;Longitudinal flash 0.10mm max

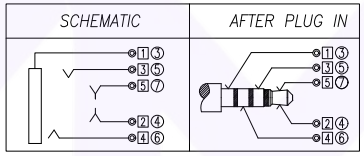

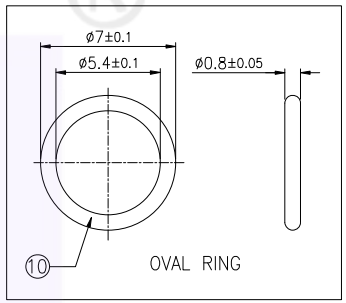

UNLESS OTHERWISE SPECIFIED, TOLERANCE ON DECIMAL: ±0.2

ITEM	PART NAME	TERMINAL	QTY	MATERIAL	REMARK
10	OVAL RING	----	1	SILICONE	BLUE
9	BOND	----	1	----	----
8	TERMINAL	----	2	C2680 t=0.2	1st:Ni(1μm or more),2nd:Sn(MIN 2μm or more)PLATED
7	TIP SPRING-2	5	1	Ti-Cu t=0.2	1st:Ni(1μm or more),2nd:Au(MIN 0.03μm or more)PLATED
6	RING SPRING-2	4	1	Ti-Cu t=0.2	1st:Ni(1μm or more),2nd:Au(MIN 0.03μm or more)PLATED
5	RING SPRING-1	3	1	Ti-Cu t=0.2	1st:Ni(1μm or more),2nd:Au(MIN 0.03μm or more)PLATED
4	TIP SPRING-1	2	1	Ti-Cu t=0.2	1st:Ni(1μm or more),2nd:Au(MIN 0.03μm or more)PLATED
3	EARTH SPRING	1	1	Ti-Cu t=0.2	1st:Ni(1μm or more),2nd:Au(MIN 0.03μm or more)PLATED
2	COVER	----	1	PA9T(BLACK)	UL 94V-0
1	HOUSING	----	1	PA9T(BLACK)	UL 94V-0

广东小迈实业有限公司 | Website: https://www.xmconn.com | TEL: 18938295888

PART NAME	ø3.5mm WATERPROOF JACK	TOLERANCE UNLESS OTHERWISE SPECIFIED:	DRAWING:	Li	DATE:	2023.08.18	SCALE: 1:1
PART NO.	DM35A003-07SP	X ±0.2	CHECK:	Chen	DATE:	2023.08.18	SHEET: 1/1
		X.X ±0.15	APPROVAL:	Wen	DATE:	2023.08.18	REV: A0
		X.XX ±0.10					SIZE: A4
		X.XXX ±0.050					