RoHS Compliant

ZONE	ECN.NO.	DESCRIPTION	DRAWING	DATE
A		INITIAL	林生財	2024.08.22

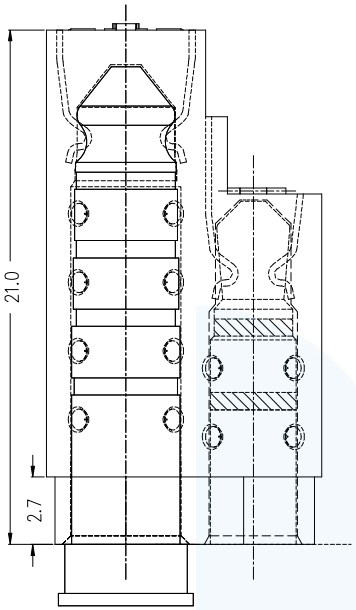

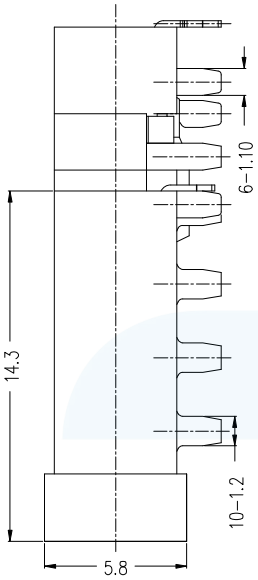

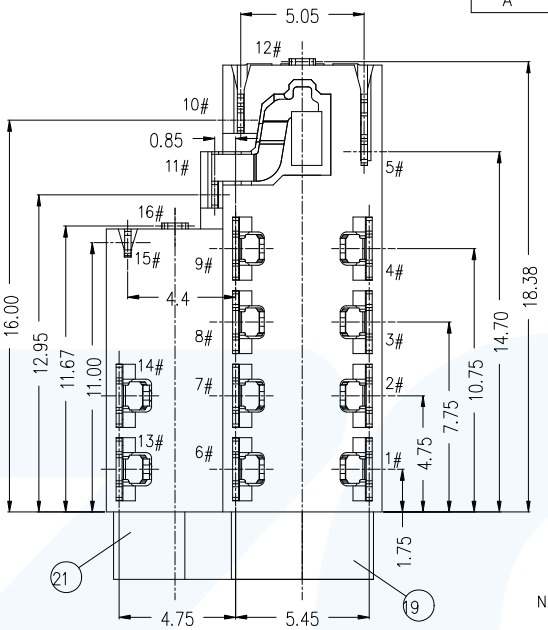

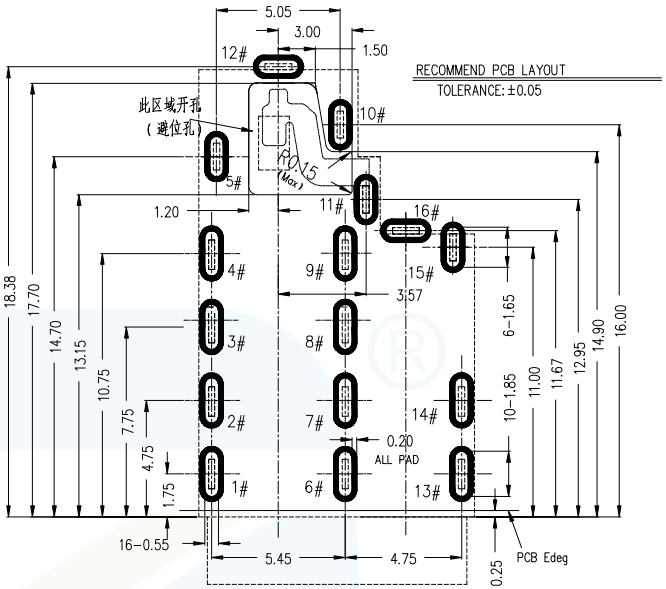

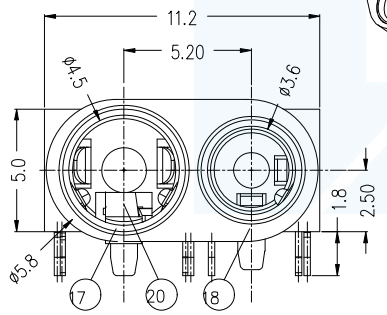

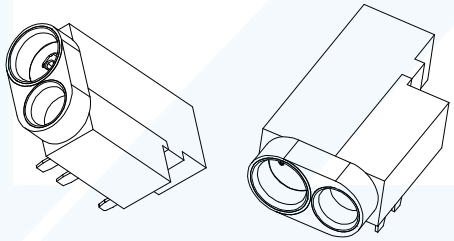

满足时序要求

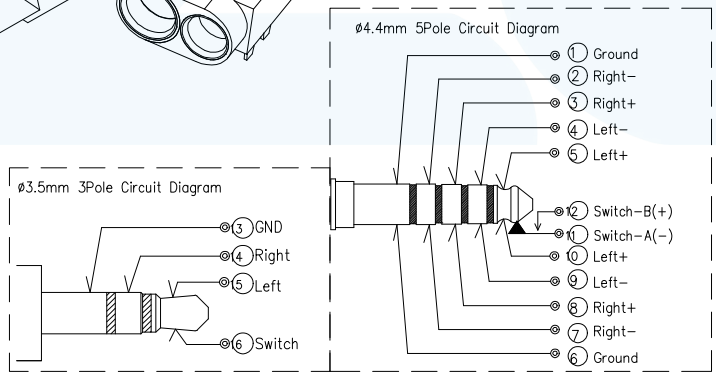

Notes:

1. Current Rating: 12V&1A max.
2. Contact Resistance: 50mOhms Max.(intial)
   Switch Resistance: 100mOhms Max.(intial)
3. Insulation Resistance: 100M Ohms Min./500V DC
4. Dielectric Withstanding Voltage: 500V AC/1Minute
5. 4.4mm Mating Force: 50N Max, Withdrawal Force: 5N Min.
   3.5mm Mating Force: 35N Max, Withdrawal Force: 3N Min.
6. Durability: 5,000 Cycles
7. Operating Temperature: -25℃ to+85℃
8. Mate Audio Plug with "JEITA RC-8141C" Standard(Length19.5mm)

Item	Name	Material	Description
21	3.5mm Housing	Thermoplastics	Black UL 94-V0
20	4.4mm Separator		
19	4.4mm Housing		
18	4.4mm Sleeve	Copper Alloy	G/F Plated Overall.
17	3.5mm Sleeve		
16	3.5mm Switch		G/F On Contact Area &Solder Tails
15	3.5mm Left		
14	3.5mm Right		
13	3.5mm GND		
12	4.4mm Switch-B		
11	4.4mm Switch-A	Stainless Steel	
5&10	4.4mm Left+	Copper Alloy	Au3u"On Contact Area G/F on Solder Tails Ni Plated Overall.
4&9	4.4mm Left-		
3&8	4.4mm Right+		
2&7	4.4mm Right-		
1&6	4.4mm GND		

LZG INDUSTRIAL CO. LTD

DRAWING:	林生財	DATE:	2024.08.22	SCALE	1:1
CHECK:	李宏鑫	DATE:	2024.08.22	MATERIAL	*
APPROVAL:	杨进宝	DATE:	2024.08.22	DWG. NO.	
DRAWING NO.	ZB44350-16DBAP-A			SHEET	1/1

PART NAME	Slime ø4.4mm 5Pole & ø3.5mm Audio Jack Combo Conn.	TOLERANCE UNLESS OTHERWISE SPECIFIED:	0.0±0.30 0.00±0.20 0.000±0.10	0.°±2° 0.0°±1° 0.00°±0.5°	UNIT: mm
PART NO.	ZB44350-16DBAP-A				