RoHS Compliant

ZONE	E C N . N O .	DESCRIPTION	D R A W I N G	D A T E
A		INITIAL	林生財	2020.02.18

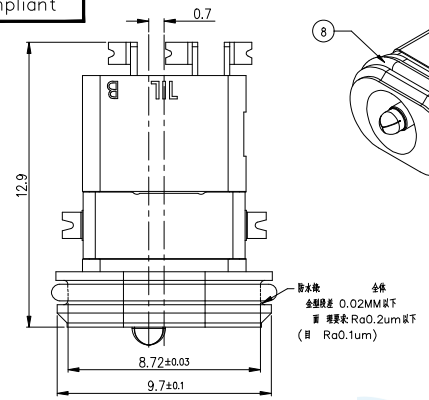

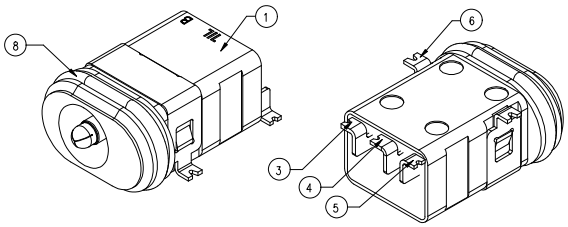

3D VIEW

NOTES

1. ELECTRICAL CHARACTERISTICS:
   1-1. RATING: 30V DC /1A
   1-2. CONTACT RESISTANCE: 30m MAX.(INITIAL)
   1-3. DIELECTRIC WITHSTANDING VOLTAGE: 300V AC FOR ONE MINUTE.
   1-4. INSULATION RESISTANCE: 100M MIN. MEASURED BY 500 VDC
2. MECHANICAL CHARACTERISTICS:
   2-1. INSERTION FORCE : 0.5kgf~2.5kgf
   2-2. WITHDRAWAL FORCE : 0.5kgf~2.5kgf
3. DURABILITY: 5,000 CYCLES .
4. WATER PROOFNESS: THIS PRODUCT IS BASED ON IPX8(2M,30min)
5. PLUG INTERFACE DIMENSIONS COMFORM TO USB2.0 SPEC.
6. OVAL RING :
   6-1. The amount of low molecular siloxanes(D3~D10)is less than 200ppm
   6-2. Hardness of silicone rubber: 70°
7. FOR REFLOW SOLDERING LEAD-FREE PROCESS.
8. PACKAGING: TAPE & REEL.

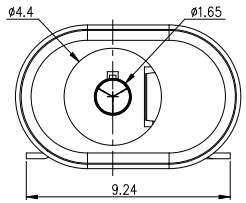

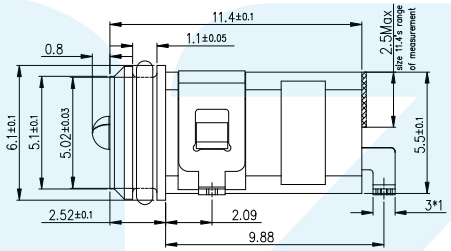

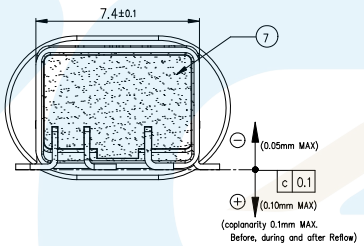

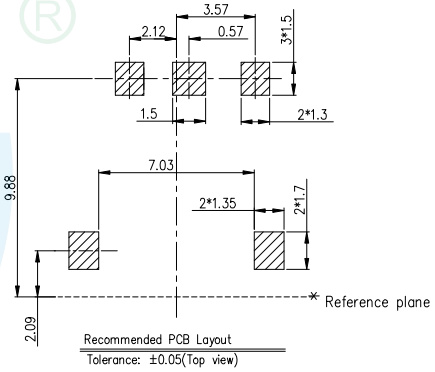

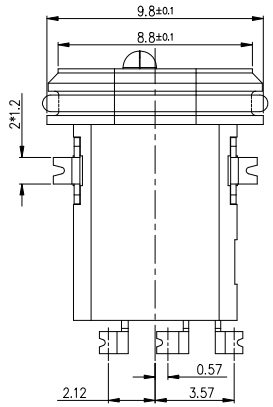

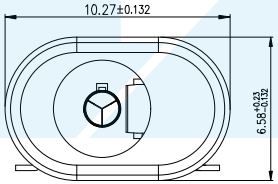

O-Ring assembly state

SCHEMATIC

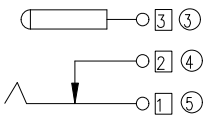

Oval ring drawing:

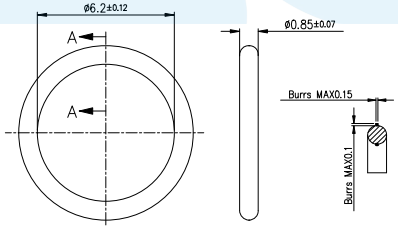

注: 防水圈要求组装在产品上.

Note: The waterproof ring shall be assembled on the product

NO.	DESCRIPTION	MATERIAL	REMARKS	QTY
8	O-RING	----	----	1
7	BOND	----	----	1
6	SHELL	C2680 T=0.25	Overall : Nickel-underplated(1um MIN) Outer plating: Sn-plated(2um MIN)	1
5	TIP SPRING 1	Ti-Cu T=0.25	Overall : Nickel-underplated(1um MIN) Outer plating: Sn-plated(2um MIN)	1
4	SHNUT 2	C2680 T=0.25	Overall : Nickel-underplated(1um MIN) Outer plating: Sn-plated(2um MIN)	1
3	CENTER PIN 3	C2680 T=0.3	Overall : Nickel-underplated(1um MIN) Outer plating: Sn-plated(2um MIN)	1
2	CAP	LCP(E130i) 94v-0	COLOR BLACK	1
1	HOUSING	LCP(E130i) 94v-0	COLOR BLACK	1

LZG INDUSTRIAL CO. LTD

PART NAME	WATERPROOF DC POWER JACK	TOLERANCE UNLESS OTHERWISE SPECIFIED:	0.0±0.38 0.00±0.30 0.000±0.10	0.°±2° 0.0°±1° 0.00°±0.5°	UNIT: mm
PART NO.	ZB30003-05SBAP-A				

DRAWING:	林生財	DATE:	2020.02.18	SCALE	1:1
CHECK:	李宏鑫	DATE:	2020.02.18	MATERIAL	*
APPROVAL:	楊进宝	DATE:	2020.02.18	DWG. NO.	
DRAWING NO.	ZB30003-05SBAP-A			SHEET	1/2