RoHS Compliant

| ZONE | E C N . N O . | DESCRIPTION | DRAWING | DATE |
|---|---|---|---|---|
| A | | INITIAL | 林生財 | 2020.02.18 |

IPX7 1m/30min

NOTES:

SPECIFICATION:

1. CURRENT RATING: 3.0A MAX
2. DIELECTRIC WITHSTAND VOLTAGE: 100VAC
3. TEMPERATURE RANGE: −30 ˚C ~ 85 ˚C
4. CONTACT RESISTANCE: 40 MILLIONHM MAX
5. INSULATION RESISTANCE: 100 MEGOHMS MIN.
6. INSERTION FORCE :10N~30N
7. UNMATING FORCE: 8N~30N
8. DURABILITY:1500 CYCLES

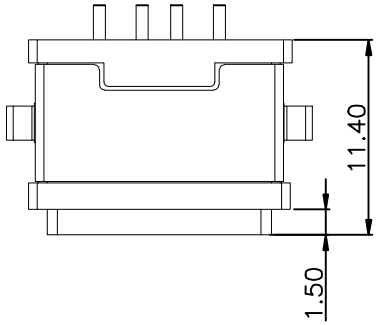


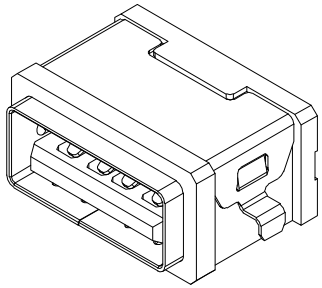

3D VIEW

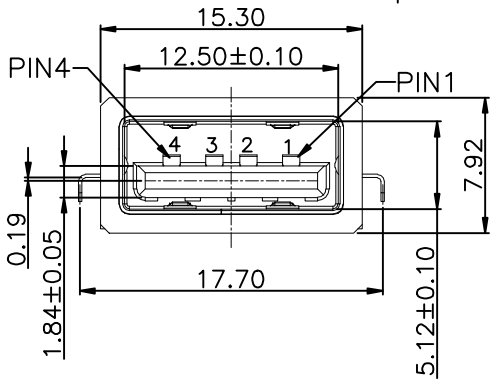


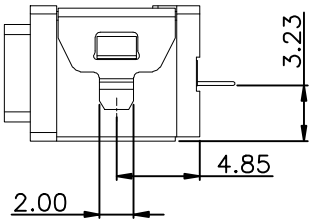


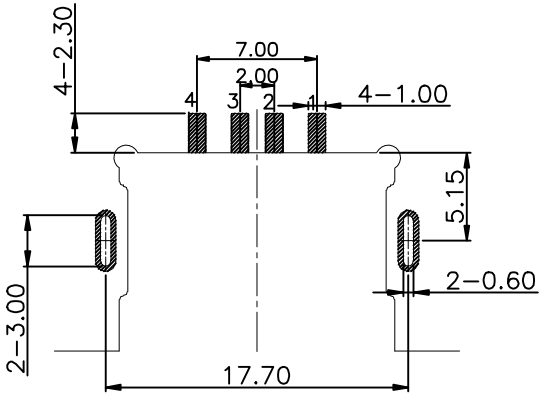


RECOMMENDED PCB LAYOUT(TOP VIEW)

THICKNESS T=1.0mm
DEFAULT TOLERANCE+/−0.05

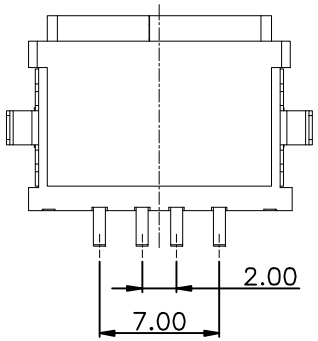


**结构设计注意:**

**1.成品使用时，如有洗面奶泡沫、牙膏、洗手液、脏污液体，请在TYPE-C口外面再设计一层外壳，保护TYPE-C表面金手指不会被脏污覆盖。**

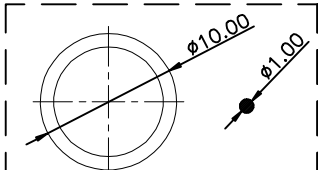


注：防水圈是圆形橡圈，直径为1.0mm的硅胶圈，防水圈挤压量，由1.0mm挤压到0.4mm ~ 0.5mm，防水效果好

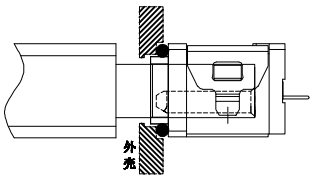


组装示意图

PIN ASSIGNMENT

| PIN NO. | 1 | 2 | 3 | 4 |
|---|---|---|---|---|
| SINGAL NAME | VBUS | D− | D+ | GND |

| NO. | DESCRIPTION | MATERIAL | REMARKS | QTY |
|---|---|---|---|---|
| 5 | OUTER SHELL | SUS 301 | WASH | 1 |
| 4 | INNER SHELL | SUS 301 | WASH | 1 |
| 3 | PLASTIC SHELL | PA10T | COLOR BLACK | 1 |
| 2 | CONTACT | BRASS | Au/Ni Plating T=0.25mm | 4 |
| 1 | HOUSING | PA10T | COLOR BLACK | 1 |

LZG INDUSTRIAL CO. LTD

| | | | | | |
|---|---|---|---|---|---|
| DRAWING: | 林生財 | DATE: | 2020.02.18 | SCALE | 1:1 |
| CHECK: | 李宏鑫 | DATE: | 2020.02.18 | MATERIAL | * |
| APPROVAL: | 杨进宝 | DATE: | 2020.02.18 | DWG. NO. | |
| DRAWING NO. | ZB40005−06FBAP−A | | | SHEET | 1/1 |

| | | | | |
|---|---|---|---|---|
| PART NAME | WATERPROFF USB 2.0 A TYPE | TOLERANCE UNLESS OTHERWISE SPECIFIED: | 0.0±0.3 0.00±0.1 0.000±0.05 | 0.˚±2˚ 0.0˚±1˚ 0.00˚±0.5˚ | UNIT: mm |
| PART NO. | ZB40005−06FBAP−A | | | | |